BRABBU

DESIGN FORCES

CASEGOODS UPHOLSTERY LIGHTING RUGS

KOI | CONSOLE

KOI carp is a recurring symbol of Japanese culture, highly appreciated by its decorative purposes, note only in water gardens but also in Irezumi pratice or, most cmmonly, in tattoos. Its natural colour mutations reveal their capacity to adapt, just like the set of KOI tables with table tops in galss or marble that you can choose to better fit in your ambiences. The KOI scales from the sides of the tables shine and reflect - on its brass surface - the sun caught throughout the clear water. KOI and the Japanese word for love or affection are homophones, making the carp also a symbol of love and friendship.

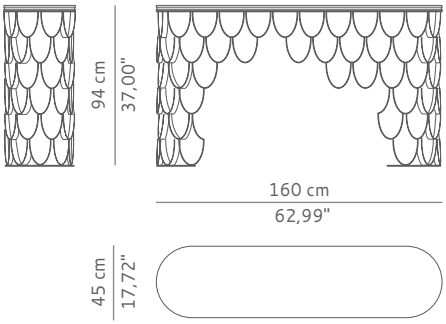

DIMENSIONS

WIDTH	160 cm | 62,99"
DEPTH	45 cm | 17,70"
HEIGHT	94 cm | 37,00"

MATERIALS

Base in brushed aged brass, top in nero marquina marble.

PACKAGING

DIMENSIONS	W 170 cm | 66,92" D 53 cm | 20,90" H 110 cm | 43,30"
VOLUME	0,99 m^3 | 34,96ft^3
WEIGHT	120kg | 264,5lbs

LEAD TIME

Production time is between 8 to 10 weeks for BRABBU collections.
Delivery time is not included.

All of our furniture can be made to measure and it is available in different finishes.
Please note that the colours and materials shown are for reference only and small variations may occur.