LUXXU

MODERN DESIGN & LIVING

APOTHEOSIS | center table

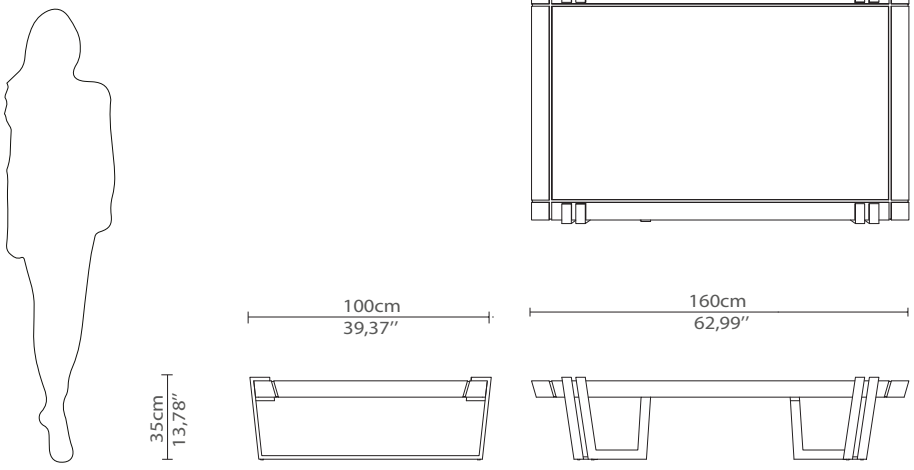

DIMENSIONS
Height: 35cm | 13,78''
Lenght: 160cm | 62,99''
Depth: 100cm | 39,37''

MATERIALS
Body: Brass, Wood & Marble

STANDARD FINISHES
Body: Polished brass, Black lacquer & Emperador dark marble

WEIGHT
Aprox: 75kg | 165,35lbs

PACKAGING
Volume: 0,74m^3 | 26,13ft^3
Weight: 82kg | 180,78lbs